Interlock System (CVT)

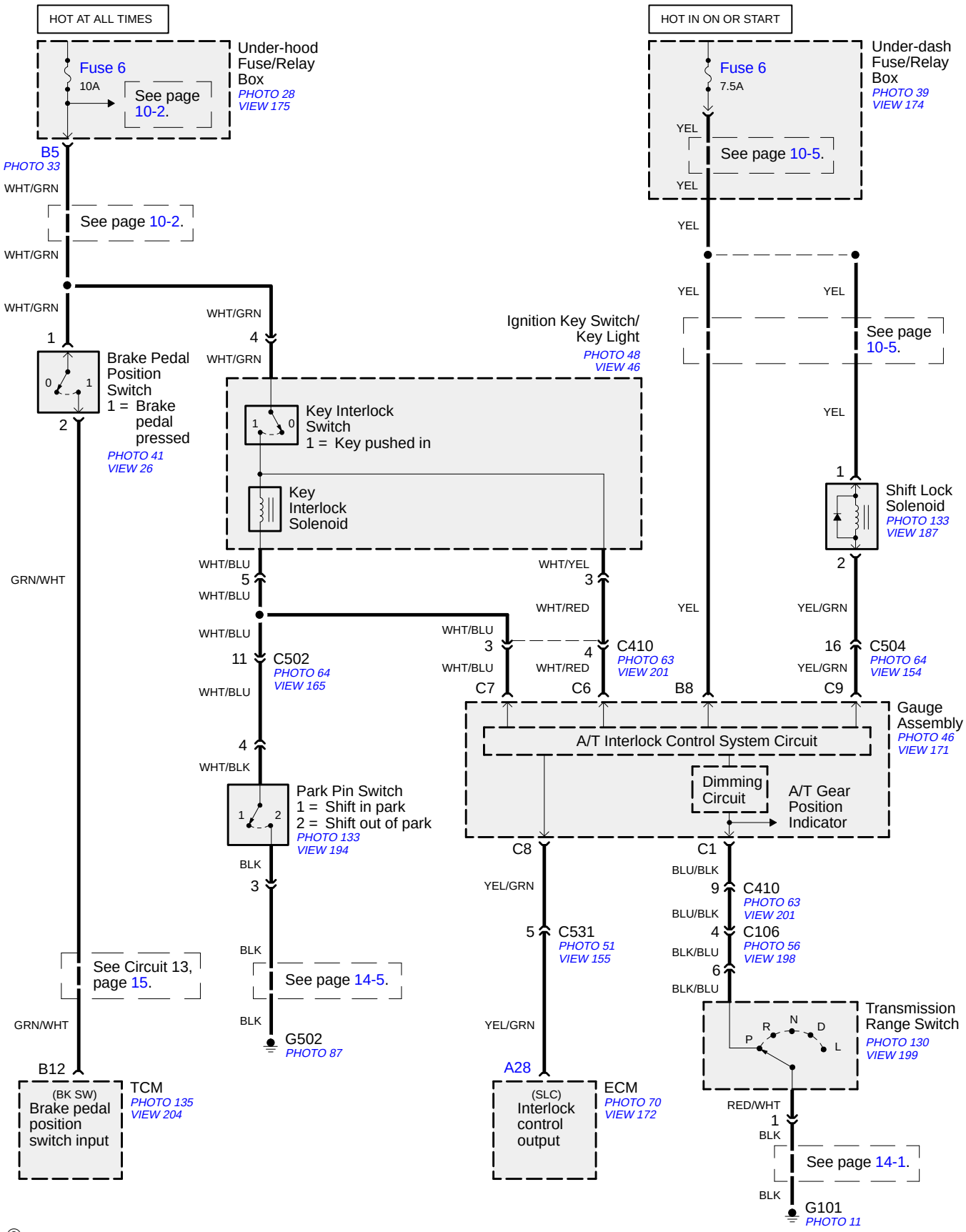

©2006 American Honda Motor Co., Inc.