SRS (Supplemental Restraint System)

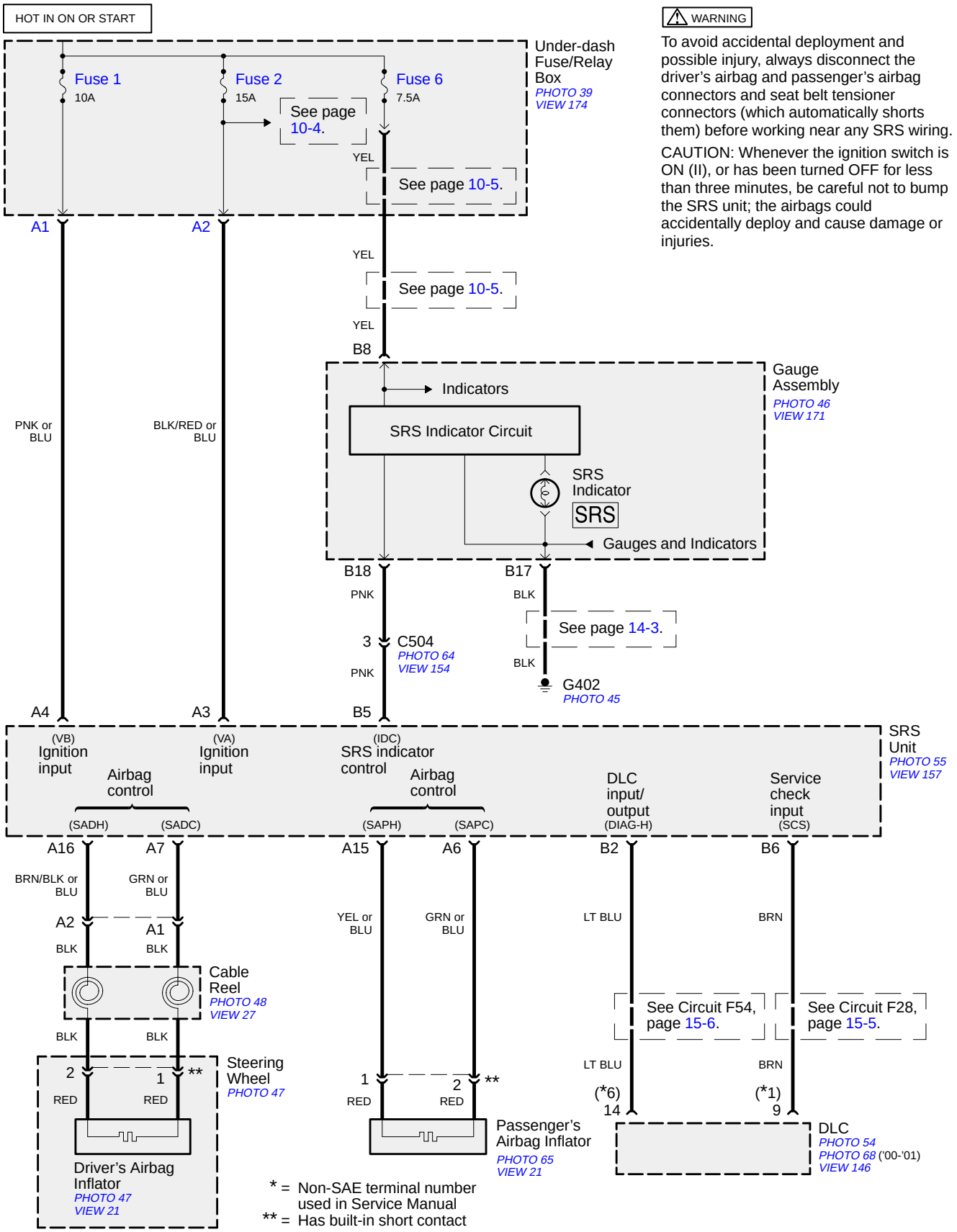

WARNING

To avoid accidental deployment and possible injury, always disconnect the driver's airbag and passenger's airbag connectors and seat belt tensioner connectors (which automatically shorts them) before working near any SRS wiring.

CAUTION: Whenever the ignition switch is ON (II), or has been turned OFF for less than three minutes, be careful not to bump the SRS unit; the airbags could accidentally deploy and cause damage or injuries.

©2006 American Honda Motor Co., Inc.