Fuel and Emissions

– PGM-FI System (Late Production ’01)

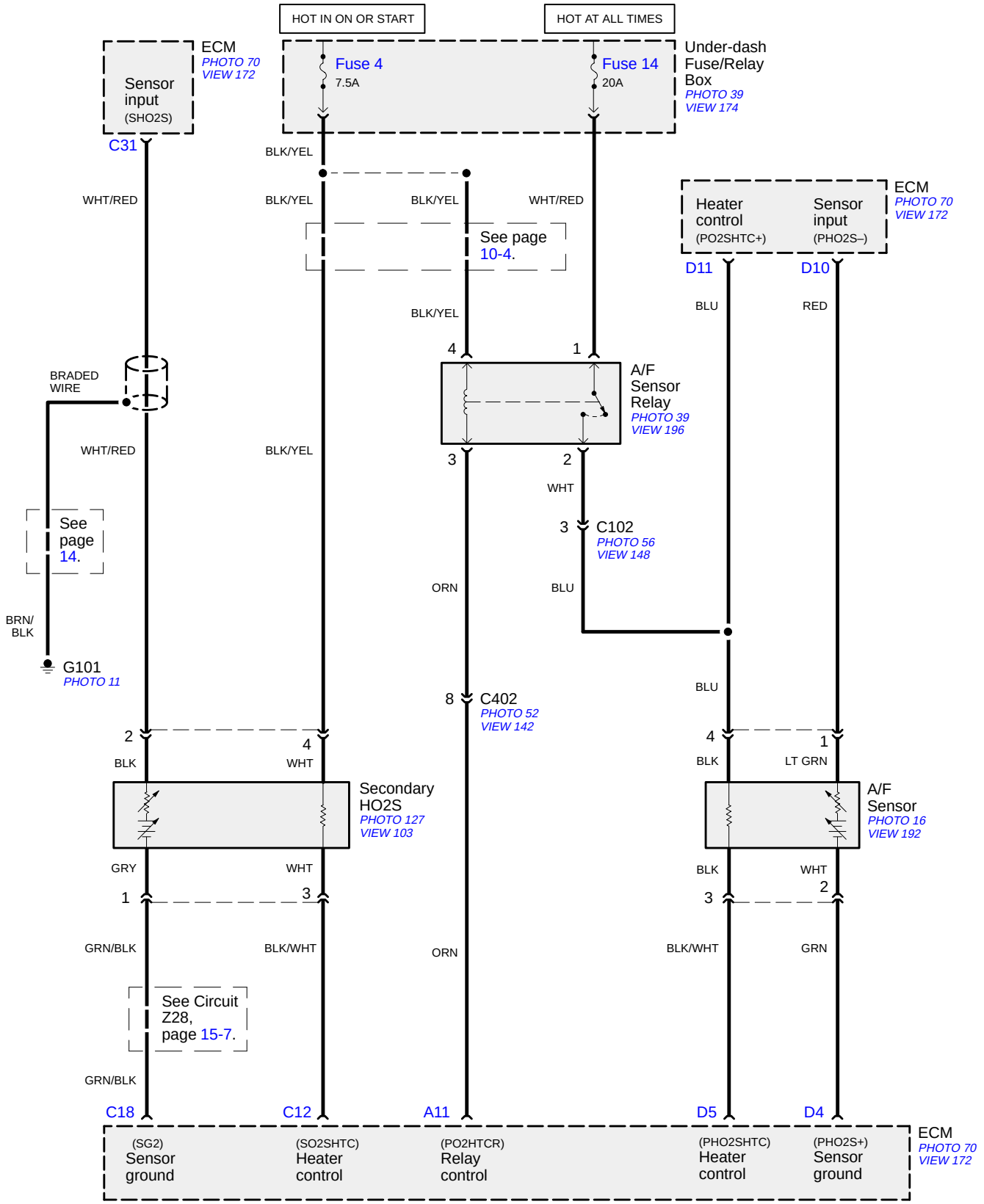

©2006 American Honda Motor Co., Inc.