Fuel and Emissions

– ECM Power and Ground

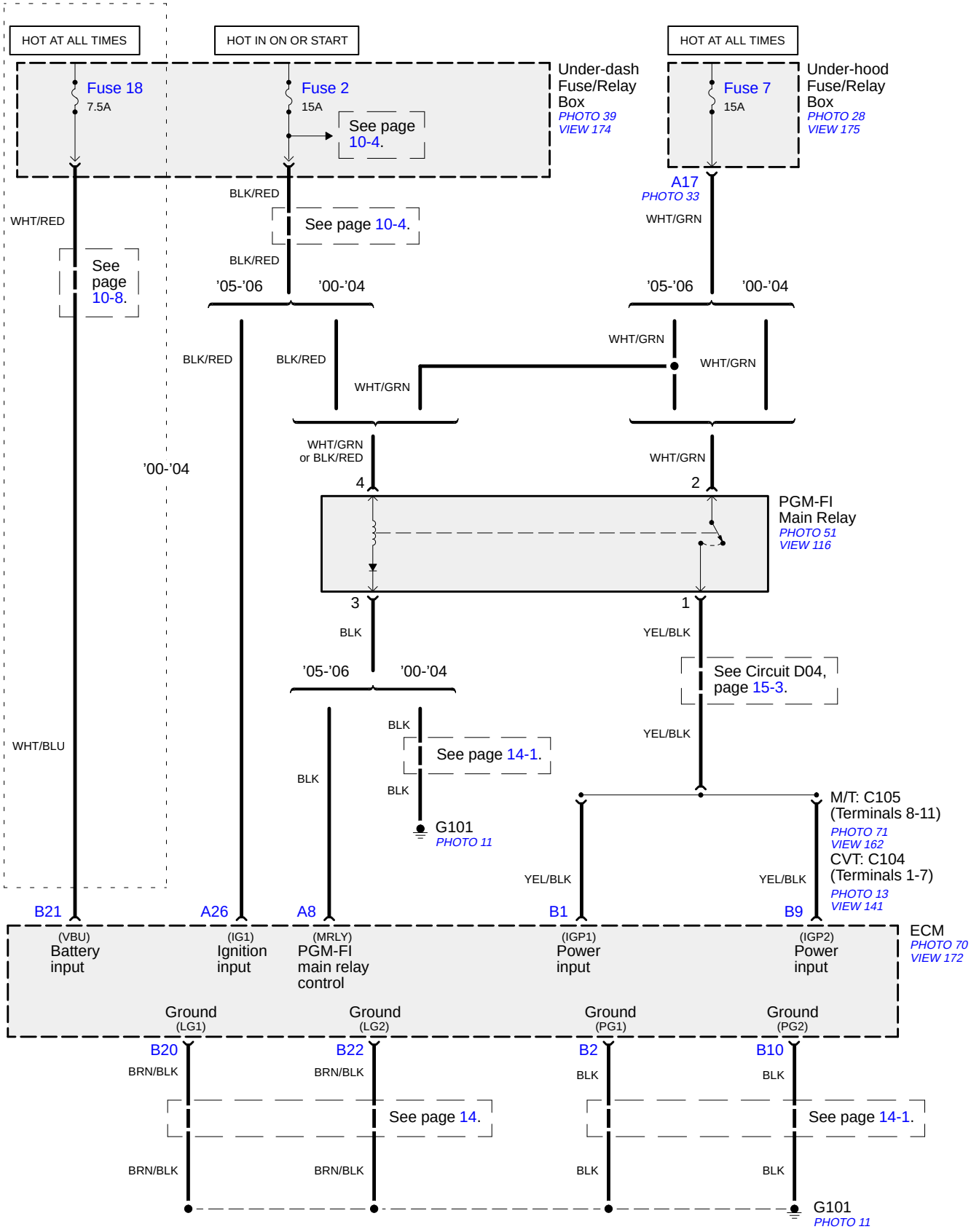

©2006 American Honda Motor Co., Inc.