Splice and Junction Connector Details

– Circuit M33 (CVT)

CVT Low Position

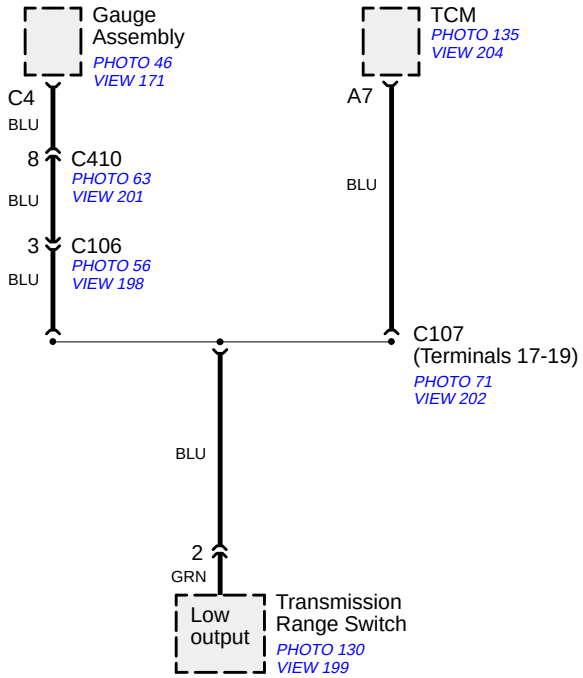

©2006 American Honda Motor Co., Inc.