Splice and Junction Connector Details

– Circuit 61

Horn Relay Control

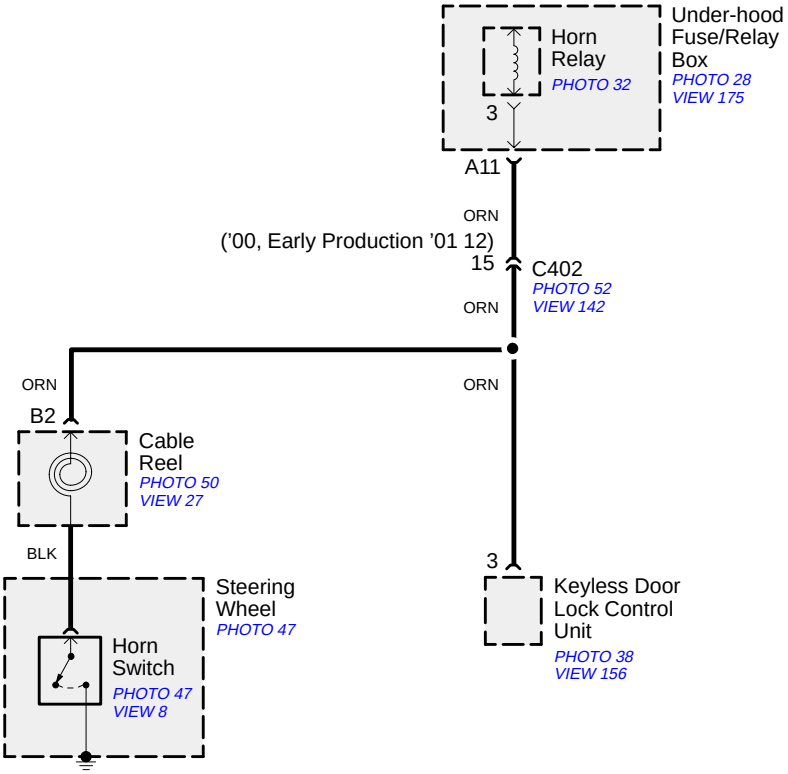

©2006 American Honda Motor Co., Inc.