Ground Distribution

– G403, G404, G451

NOTE: Wires shown without color codes are black.

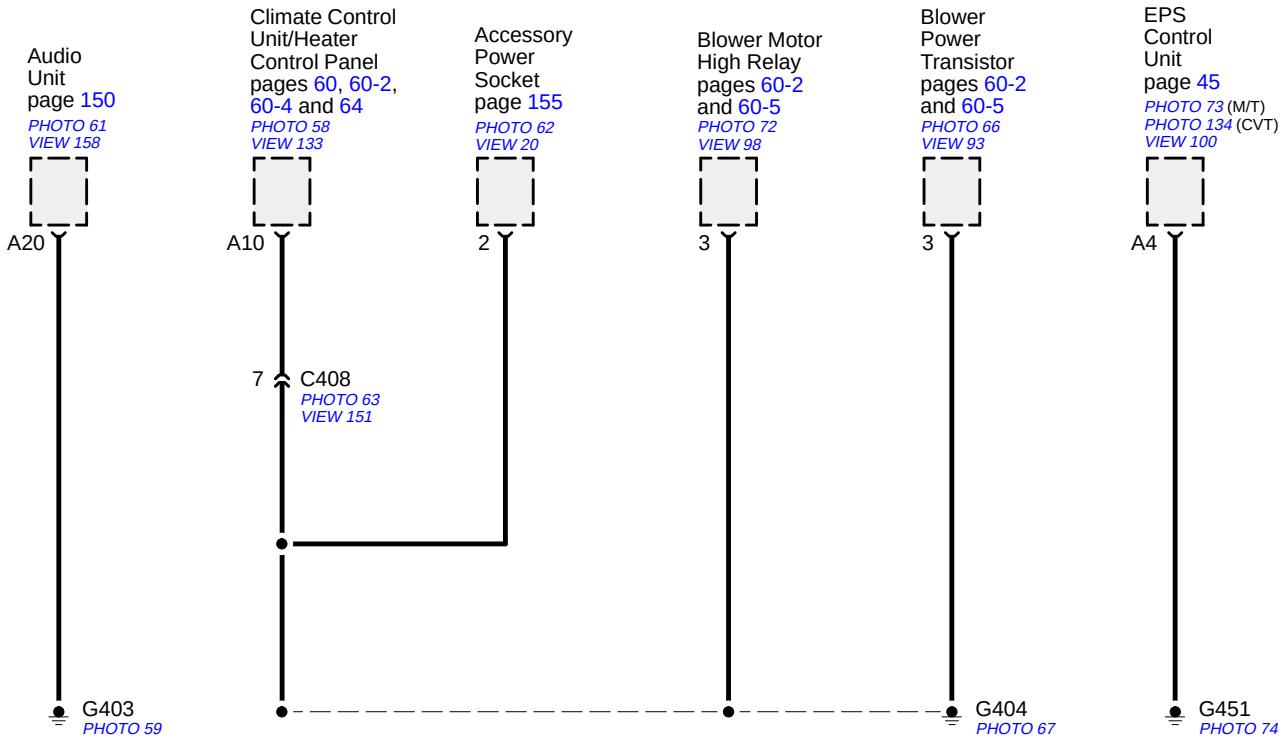

©2006 American Honda Motor Co., Inc.