Power Distribution

– Under-dash Fuse/Relay Box – Fuses 24, 26, and 27

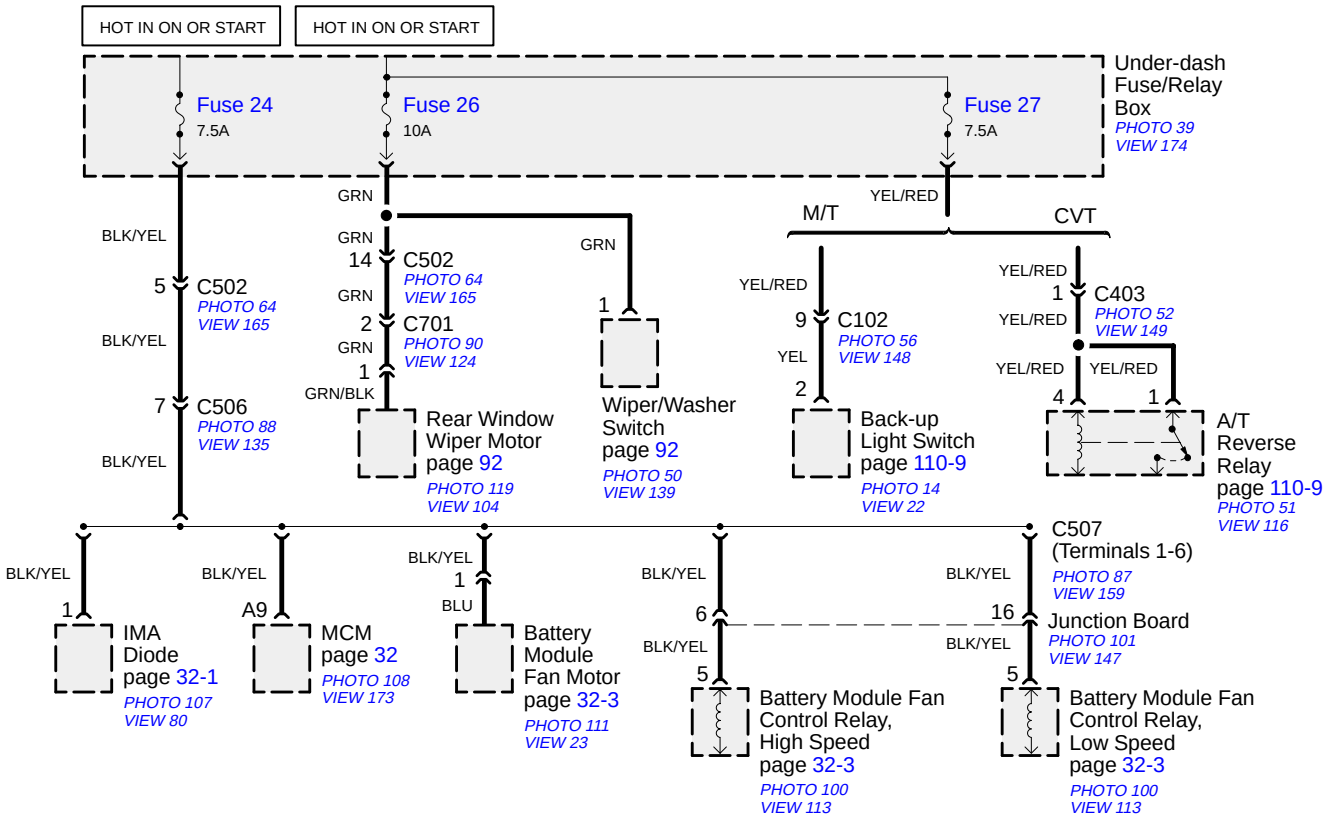

©2006 American Honda Motor Co., Inc.