Power Distribution

– Under-dash Fuse/Relay Box – Fuses 14, 16 and 17 (Canada)

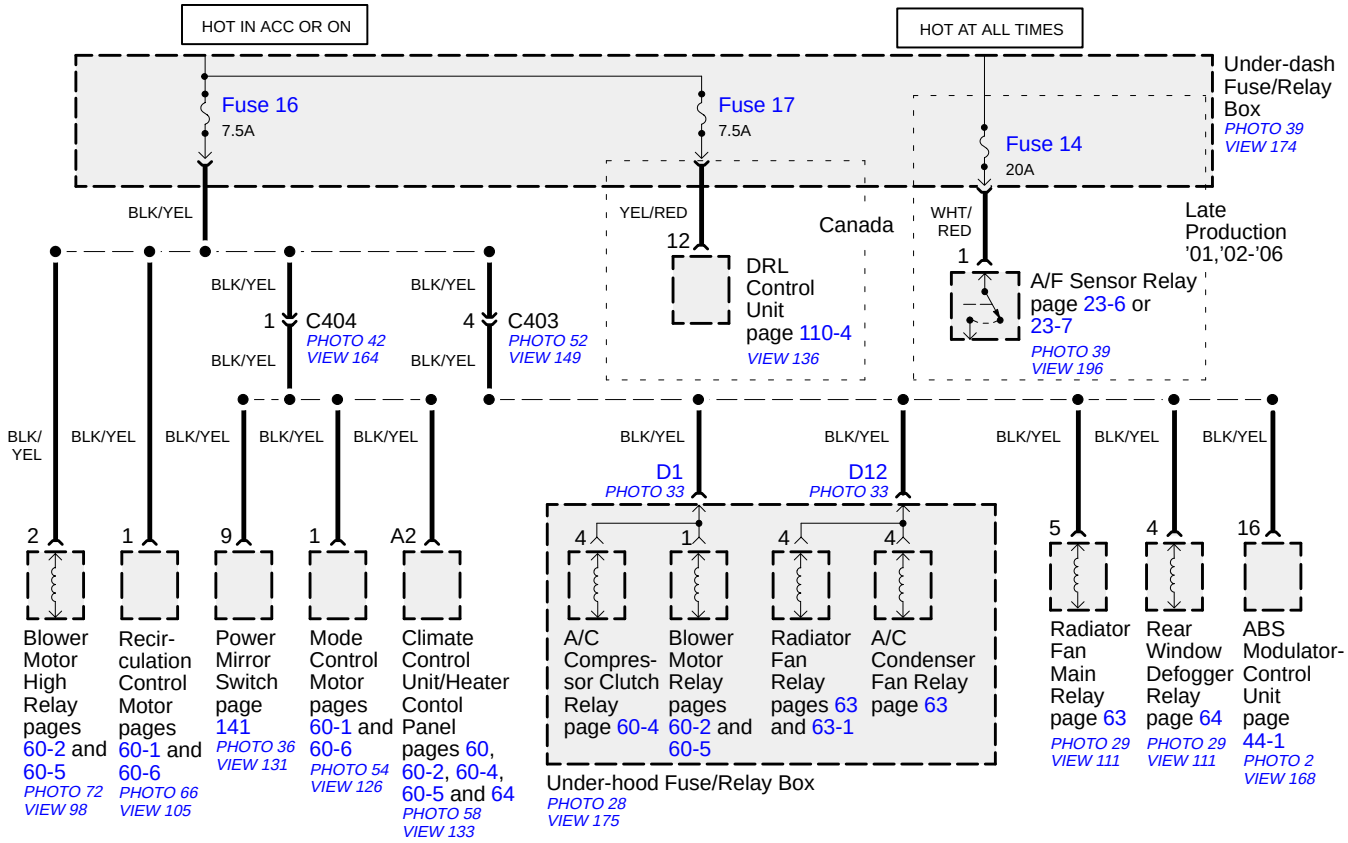

©2006 American Honda Motor Co., Inc.