Front Pillar

Mass Production Body Welding Diagram

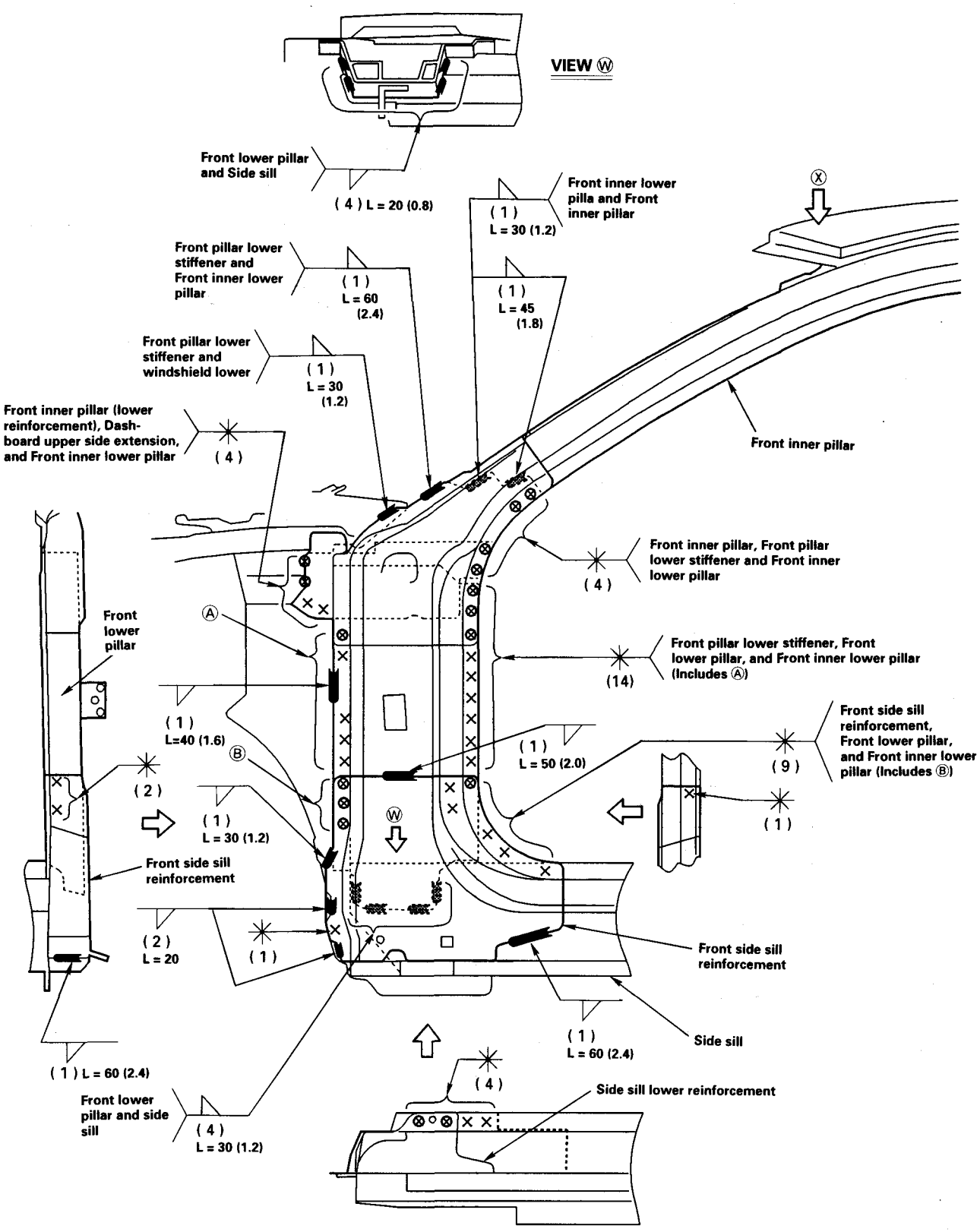

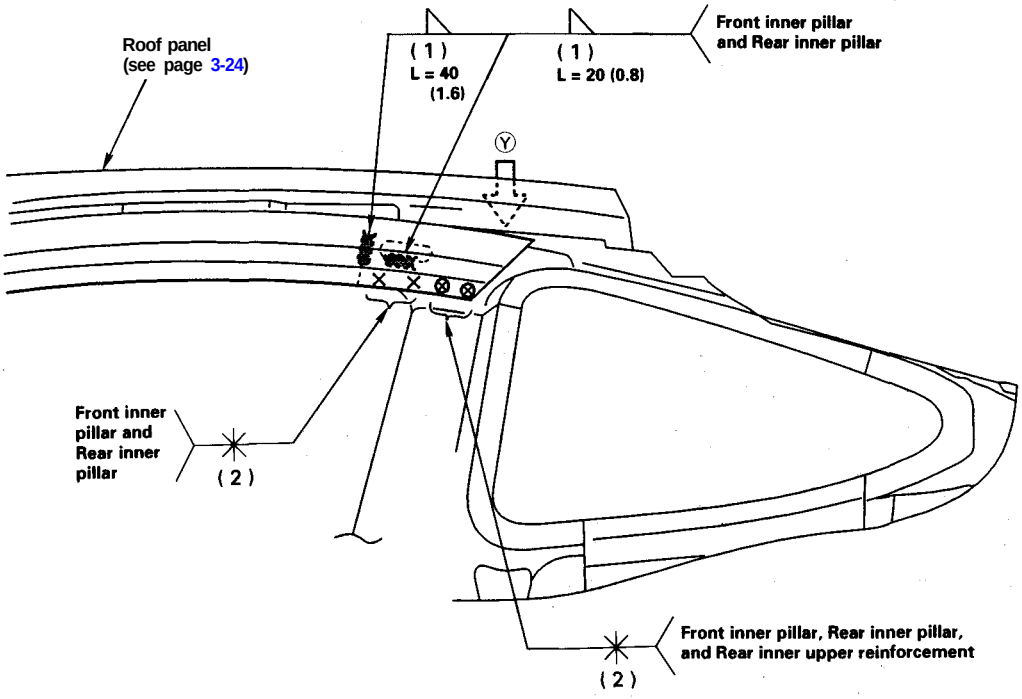
Roof panel
(see page 3-24)
(1)
L = 40
(1.6)
(1)
L = 20 (0.8)
Front inner pillar
and Rear inner pillar
Ⓨ
Front inner
pillar and
Rear inner
pillar
(2)
Front inner pillar, Rear inner pillar,
and Rear inner upper reinforcement
(2)

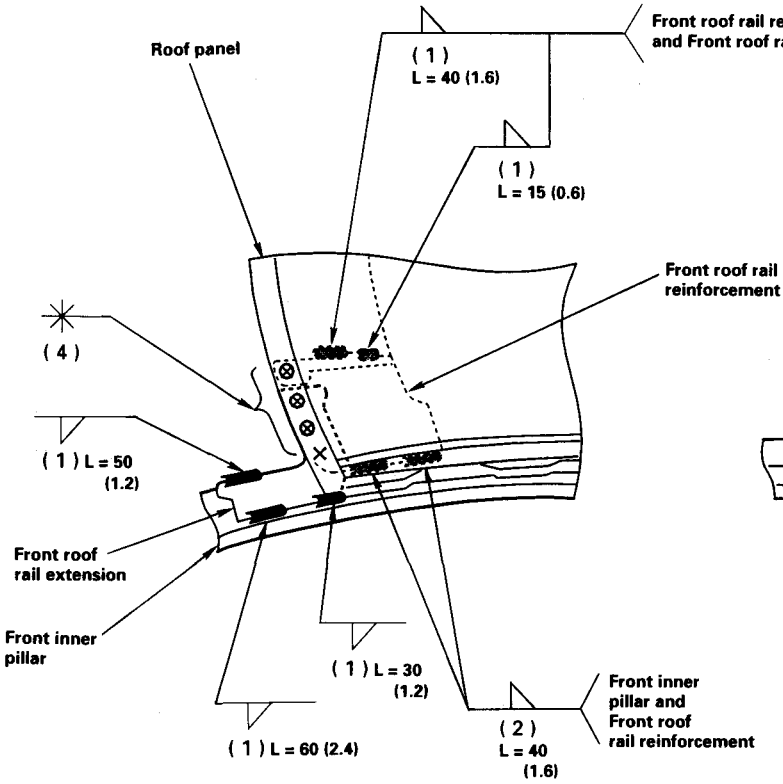
Roof panel
(1)
L = 40 (1.6)
Front roof rail reinforcement
and Front roof rail
(1)
L = 15 (0.6)
Front roof rail
reinforcement
(4)
(1) L = 50
(1.2)
Front roof
rail extension
Front inner
pillar
(1) L = 30
(1.2)
(1) L = 60 (2.4)
(2)
L = 40
(1.6)
Front inner
pillar and
Front roof
rail reinforcement
VIEW Ⓧ

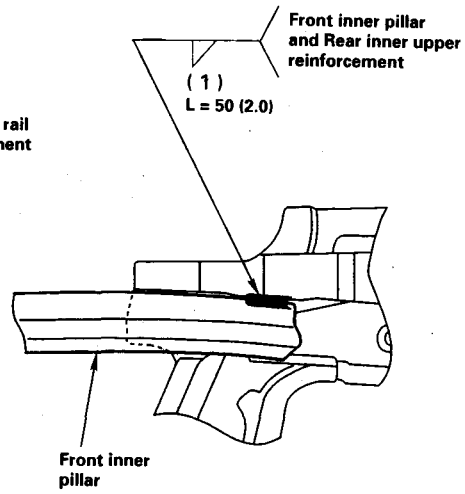
Front inner pillar
and Rear inner upper
reinforcement
(1)
L = 50 (2.0)
Front inner
pillar
VIEW Ⓨ